0 - 10 WIRING

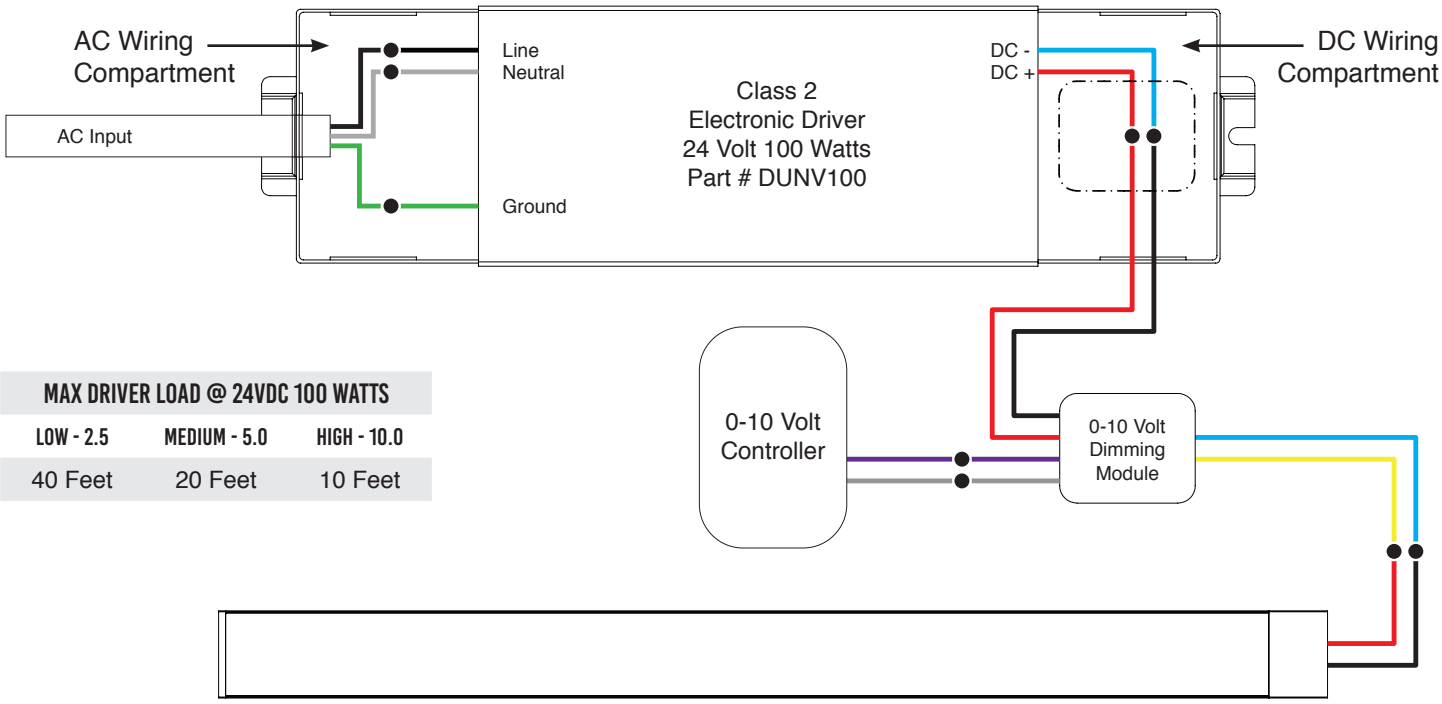

MAX DRIVER LOAD @ 24VDC 100 WATTS		
LOW - 2.5	MEDIUM - 5.0	HIGH - 10.0
40 Feet	20 Feet	10 Feet

Note : 0-10 volt module fits inside the low voltage compartment of driver

646.350.5025
New York, NY
www.ScoutLighting.com
Info@ScoutLighting.com